TRIDENT
PNEUMATICS (PVT) LTD.,

Instruction Manual
Dry spell

INSTALLATION, OPERATION, MAINTENANCE

Regenerative Type Heatless Desiccant Dryer

CE

WE REDEFINE COMPRESSED AIR TREATMENT SYSTEMS

5/232 KNG Pudur road,
Somayampalayam (PO),
Coimbatore 641 108
India,
Ph : +91 422 2400492,
Fax: +91 422 2401376,
email: sales@tridentpneumatics.com
http://www.tridentpneumatics.com

Contents

1. Introduction 3

1.1 DESIGN 3
1.2 RELEVANT UNITS 3
1.3 STATEMENT OF CONFORMITY 3
1.4 DESCRIPTION 3
1.5 ADSORBANT MATERIAL 4
1.6 OPERATING PRINCIPLES 4
1.7 SAFETY 4

2. Installation 5

2.1 STORAGE 5
2.2 INSTALLATION SITE AND CONNECTIONS 5
2.3 ELECTRICAL CONNECTIONS 6
2.4 RUNNING THE INSTALLATION 6

3.1 OPERATOR 7
3.2 CONTROL PANEL 7
3.3 OPERATING CYCLES TIME 7
3.4 HOW TO STOP THE DRYER 8

4.1 MONTHLY INSPECTIONS 8
4.2 HALF-YEARLY INSPECTIONS 8
4.3 ANNUAL INSPECTIONS 8

5.1 QUANTITY OF DESICCANT IN THE DRYER 9

3. Operation 7

6.1 LEDS NOT GLOWING 10
6.2 TOWER STATUS LED NOT CHANGING 10
6.3 LEDS STATUS CHANGES BUT TOWER NOT SWITCHING 10
6.4 NO PURGING 10
6.5 CONTINUOUS PURGING AT TOWER 1 10
6.6 HIGH PURGE LOSS 10
6.7 HIGH PRESSURE DROP ACROSS DRYER 10

4. Maintenance 8

7.1 OPERATION DIAGRAM (GR0095) 10
7.2 OVERALL DIMENSIONS (EN0216, EN0217, EN0218 AND EN0219) 10

8. Warranty Certificate

8 Warranty Certificate 11

This Document may be modified without notice reproduction, even partial, forbidden without written Authentication

READ THIS MANUAL CAREFULLY
BEFORE INSTALLING OR OPERATING THE EQUIPMENT

These symbols warn you of any dangers and the measures to be taken to prevent them.

The most important points for the correct operation of your dryer are printed in bold type.

1. Introduction

Dryspell series is a heatless adsorption air dryer range especially made for small compressed air flow treatment. Compact and easy to maintain, each dryer is equipped with a pre-filter 0.3micron to protect the desiccant from the variety of compressed air pollutant and with After filters.

1.1 DESIGN

Dryspell heatless regenerating adsorption dryers make it possible to eliminate any water vapor remaining in the compressed air at the outlet of the compressor + final condenser assembly. The dryers have been designed under nominal standard conditions in order to obtain a dew point of - 40°C.

1.2 RELEVANT UNITS

This manual describes the following models:

Dryspell Model	Nominal Flow scfm
10	10
20	20
30	30
45	45
60A	60
100	100

1.3 STATEMENT OF CONFORMITY

The units listed above comply with the current legislation and, in particular, with the following European directives:

- 97/23/CE: Pressurized Equipments
- 89/392/CEE: Machine Safety
- 89/336/CEE: Electromagnetic Compatibility
- 73/23/CEE: Low Voltage

1.4 DESCRIPTION

The dryer consists of:

- 2 aluminium towers filled with desiccant
- 2 solenoid valves
- 2 exhaust silencers
- 1 regeneration nozzle
- 1 electronic control panel
- 2 aluminium blocks including shuttle valves
- 1 pressure gauge
- 1 sub-micron pre-filter (0.3 to 0.6 micron)

This Document may be modified without notice reproduction, even partial, forbidden without written Authentication

1.5 ADSORBANT MATERIAL

The desiccant takes the form of highly porous particles with surfaces, which are able to retain (adsorb) the water vapor present in the compressed air (drying phase) and restore it when the air is at atmospheric pressure (regeneration phase). The desiccant used is active alumina (Al_2O_3).

1.6 OPERATING PRINCIPLES

The two columns operate alternately in the drying and regeneration phases. Regeneration in one tank results from the expansion to atmospheric pressure of part of the dry compressed air leaving from the other. The pressure reducer is responsible for this transfer. Under nominal conditions (service pressure of 7 bars), 12.5% of the nominal flow is used for regeneration. The regeneration phase is shorter than the drying phase in order to allow the regenerated column to return to service pressure before a new cycle starts. The dryer is equipped with a pressure gauge in order to measure the operating pressure of the columns.

1.7 SAFETY

Pressurized tanks may explode if used improperly. It is therefore essential to locate any equipment, which contains one or more of such tanks in such a way that the risks relating to incorrect use are reduced to the absolute minimum.

The person responsible for the staff who is going to install, operate and maintain the machines described in this manual must make sure that they have read and understood these instructions.

In particular we draw your attention to the safety procedures which are described in this manual and which must be scrupulously adhered to. Observing these measures will allow you to install, operate and maintain your dryer without risk.

Dryspell dryers are intended for the drying of compressed air. Under no circumstances should they be used to dry other gases before Trident has performed a preliminary study and provided special instructions.

The desiccants used are not noxious. However, they may cause respiratory problems if they are inhaled in dust form. The use of a dust mask is sufficient to protect personnel. If dispersed in the environment, desiccants may represent a source of pollution the consequences of which are uncontrollable. By the end of its lifetime, the desiccant will have accumulated all the pollutants present in the compressed air. Use a non-polluting method of disposal.

This Document may be modified without notice reproduction, even partial, forbidden without written Authentication

2. Installation

Various risks (crushing, explosion, projection, noise…): only personnel qualified in the installation of electro-pneumatic systems should perform the installation operations described in this chapter. Follow the procedure described below with care in order to prevent exposing personnel to danger.

2.1 STORAGE

If your dryer is about to be stored during a long time before installation and use, take care to the following instructions:

- If possible let the dryer in its original packing (In particular products fitted with marine packing with plastic film and desiccant)
- Check that air inlet and outlet are correctly blocked in order to protect the desiccant against humidity and dust.
- Check that the machine is correctly protected from atmospheric dust or water.
- Check that the store is frost protected
- Make sure to archive correctly the attached documents.

2.2 INSTALLATION SITE AND CONNECTIONS

..

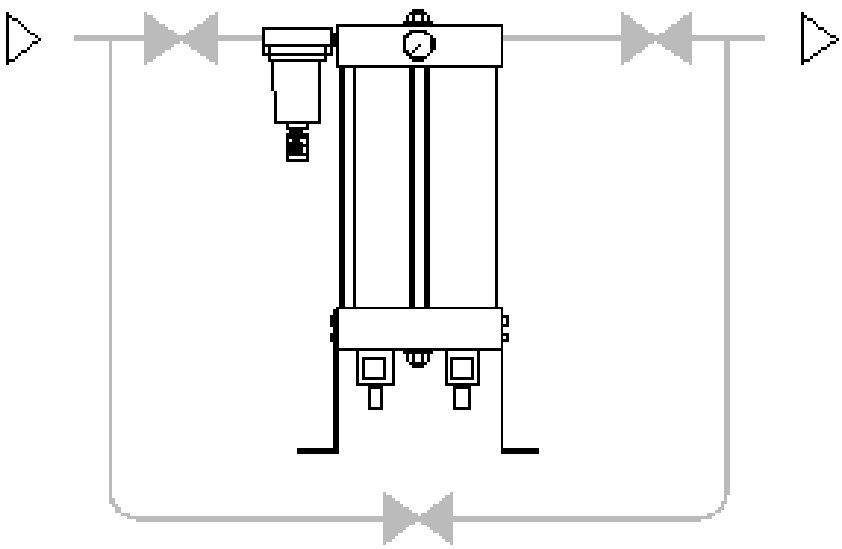

1. Install the dryer in a closed clean, dry room protected from frost. Access to the room should be restricted to personnel qualified in unit maintenance and operation. The room must be adequately ventilated. The dryer must not be directly exposed to sources of heat. The temperature of the room must not exceed 43°C.

2. Make sure that the dryer is not near any equipment which does not comply with the electromagnetic compatibility directives and which may degrade dryer operation. There

This Document may be modified without notice reproduction, even partial, forbidden without written Authentication

must be a minimum distance of 1 m between the dryer and any other equipment, which uses electricity.

3. Ensure that the dryer is installed in vertical position.

4. Fix the anchor points if it's necessary.

5. Install a system of by-pass valves between the dryer inlet and outlet so as to be able to service the installation without having to interrupt the compressed air supply from the network (see diagram above). The upstream and downstream valves must be closed during installation.

6. Connect the compressed air for processing to the dryer inlet (pre-filter connection) with strain-free ducts.

7. Connect a drain pipe to the Pre-filter lower part connection (1/4''F)

8. Connect the processed compressed air to the dryer output with strain-free ducts.

9. Check that all the connectors are airtight and that the fixings are tight.

2.3 ELECTRICAL CONNECTIONS

Connect the electrical power cable to a 220-240 V, single phase, 50 Hz grounded power supply. The DIN connector located on the front face of the dryer does the electrical connecting.

Risk of electrical shock: When connecting the machine, <u>cut off the power at the connecting point.</u>

2.4 RUNNING THE INSTALLATION

Various risks (explosion, projection, noise...): Do not pressurize until the installation procedure has been completed.

The valves upstream and downstream of the dryer must be closed and the by-pass valve open before the compressor is started.

1. Close the isolated switch located upstream of the dryer.
2. Check if the LED of the tower in drying operation glows and if the automatic drain valve at the bottom of the pre-filter drains every 4 mins.
3. Open slowly the downstream valve and check the pressure on the dryer's pressure gauge.
4. **Avoid any sudden variation in pressure as this may damage the dryer.**
5. Slowly open the upstream valve and check the pressure at the dryer's pressure gauge.
6. Slowly close the by-pass valve.

This Document may be modified without notice reproduction, even partial, forbidden without written Authentication

3. Operation

3.1 OPERATOR

Only a minimum level of experience in handling compressed air is necessary to operate a Dryspell dryer:

- Pressure and bar unit
- Flow and m ^{3}/h unit
- Dew points and °C unit
- Components of a fluid network: compressor, valves, drains, taps, pressure gauges, filters, tanks...

3.2 CONTROL PANEL

The control panel presents all the instruments necessary to control and regulate the dryer (see appendix) :

- A machine diagram
- Two LED's indicating the tower in drying operation (DL1 and DL2).
- A LED indicating the pre-filter drain operation (DL3).

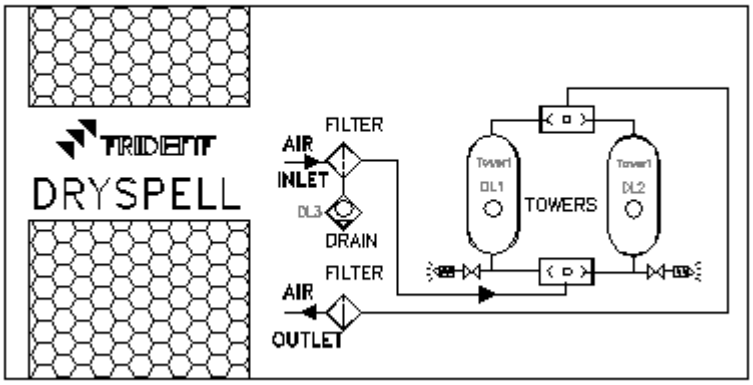

3.3 OPERATING CYCLES TIME

Drying time:	1 min 30 s
Regeneration time:	1 mins
Pressurization time:	30 s

FIRST CYCLE		SECOND CYCLE	
TOWER 1		TOWER 2	
Drying	Regeneration	Drying	Regeneration
	Pressurization		Pressurization

When DL1 is lighted, the tower 1 is in drying operation and tower 2 is in regeneration one. After tower 2 regeneration finished, DL2 is blinking to show that the tank is now in pressurization stage. After 30 seconds of pressurization, the air dryer operating cycle is inversed that means tower 1 is in regeneration stage and tower 2 in drying one.

This Document may be modified without notice reproduction, even partial, forbidden without written Authentication

The cycle's permutation occurs every 1min and half. Pre-filter condensate drain discharge is programmed every 4 minutes during 4 seconds. All these cycles times are fixed and not adjustable by user.

3.4 HOW TO STOP THE DRYER

Various risks (projection, explosion, noise...): Whenever working on the dryer, essential to disconnect it from the network. Follow the procedure below:

1. Open the by-pass valve
2. Close the upstream valve
3. Close the downstream valve
4. **Cut off and lock the isolating switch before the dryer**

4. Maintenance

Adsorption dryers are robust, reliable machines. To ensure uninterrupted, problem-free operation, regularly perform the inspections below.

4.1 MONTHLY INSPECTIONS

During the monthly routine inspection, check that:

- The drying and regeneration cycle functions normally,
- The silencers are not clogged.

4.2 HALF-YEARLY INSPECTIONS

- Check that the drying and regeneration cycles functions normally
- Check to see whether the silencers are clogged
- Replace the cartridge of the prefilter. Follow the following procedure:
    1. Stop the dryer.
    2. Use one hand to release the locking part and the other to turn the bottom housing of the filter until its escape.
    3. Unscrew the saturated filter element
    4. Screw the new cartridge
    5. Refit the bottom housing of the filter
    6. Start the machine

4.3 ANNUAL INSPECTIONS

1. Check that the drying and regeneration cycles functions normally
2. Check to see whether the silencers are clogged
3. Replace the cartridge of the prefilter. Follow the following procedure
4. Check the state of the desiccant: if the desiccant is brown (oil pollution) or if there is a lot of dust (disintegration), then change the desiccant (see next section).
5. Check the state of block 'O' rings.
6. Replace after filters cartridge

This Document may be modified without notice reproduction, even partial, forbidden without written Authentication

5. Changing the Desiccant

Various risks (projection, noise...): Professionals of adsorption dryers should perform this operation. During the entire operation, the compressor and the dryer must be shut down. It is obligatory for all personnel who are in the presence of the desiccant to wear dust masks.

- Loosen the Tie rod and remove it
- Replace the old desiccant by the new one
- Replace the two after filter cartridge
- Install and screw the Tie rod

5.1 QUANTITY OF DESICCANT IN THE DRYER

The replacement desiccant in your dryer must be absolutely identical to the initial desiccant.

The total quantities required for each model are as follows (weight in kg):

Dryspell model	Quantity
10	2
20	4.8
30	6.4
45	9
60A	16
100	30

This Document may be modified without notice reproduction, even partial, forbidden without written Authentication

6. Repair work

Only qualified persons in electro-pneumatic systems installation should perform the repair operations described in this section.

6.1 LED'S NOT GLOWING

A – Check the power supply connection and tension

6.2 TOWER STATUS LED NOT CHANGING

A – Change the controller

6.3 LED'S STATUS CHANGES BUT TOWER NOT SWITCHING

A – Check coil connection at DIN and terminal connector in the controller
B – Check the solenoid valve

6.4 NO PURGING

A – Check the solenoid valve
B – Check the exhaust valve
C – Clean the silencer (muffler)

6.5 CONTINUOUS PURGING AT TOWER 1

A – Shuttle not closing
B – Check pilot air for exhaust valve alimentation
C – Check exhaust valve piston struck

6.6 HIGH PURGE LOSS

A – Check outlet shuttle closing
B – Check for silencer chock

6.7 HIGH PRESSURE DROP ACROSS DRYER

A – Pre-filter may be chocked. Check and replace filter cartridge
B – Check whether the utilization flow is more than inlet flow as per dryer spec.
'

7. Diagrams

7.1 OPERATION DIAGRAM

7.2 OVERALL DIMENSIONS

This Document may be modified without notice reproduction, even partial, forbidden without written Authentication

WARRANTY

Products of Trident Pneumatics Pvt Ltd are guaranteed to be free from defects in materials and workmanship when installed and operated in accordance with the instructions outlined in the Instruction Manual.

Trident Pneumatics Pvt. Ltd's. obligation under this warranty shall be limited to repair or replacement (at the discretion of Trident) of defective goods returned to Trident's plant within one (1) year from the date of commissioning. (Or) 18 months from the date of dispatch whichever is earlier.

Product	:Dryspell
Model	:
Serial No.	:
Date of commissioning	:

TRIDENT PNEUMATICS PVT LTD
5/232, K. N. G. Pudur Road,
Somayampalayam (PO),
Coimbatore – 641 108
India
Tel.: +91-422-2400492
Fax: +91-422-2401376
E-mail: sales@tridentpneumatics.com
Website: http://www.tridentpneumatics.com/

Quality Assurance Dept.

This Document may be modified without notice reproduction, even partial, forbidden without written Authentication